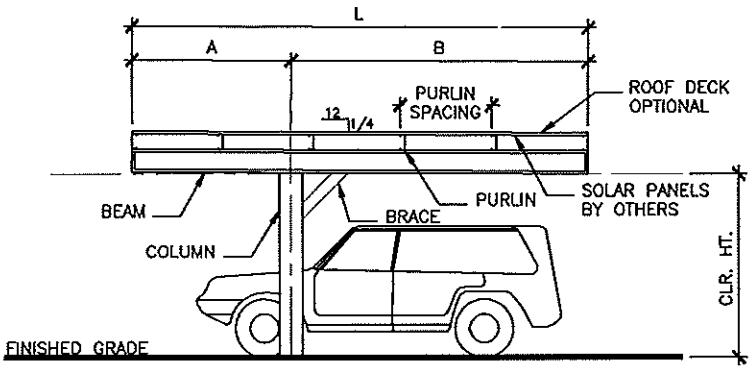

1 CROSS SECTION
BSP FLAT SLOPE N.T.S.

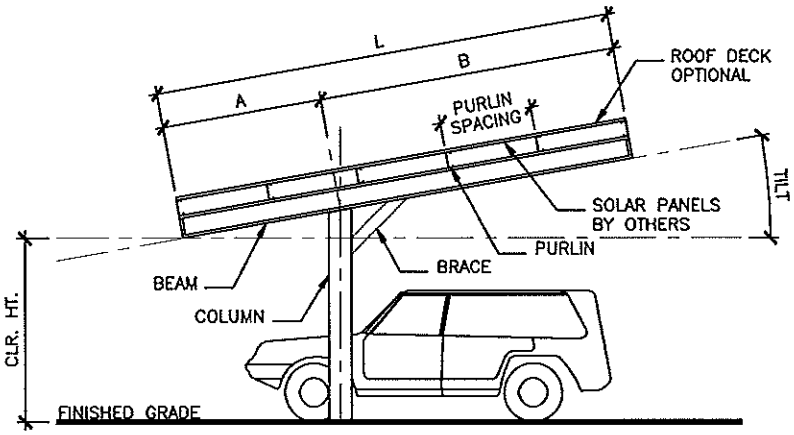

2 CROSS SECTION
BSP UP SLOPE N.T.S.

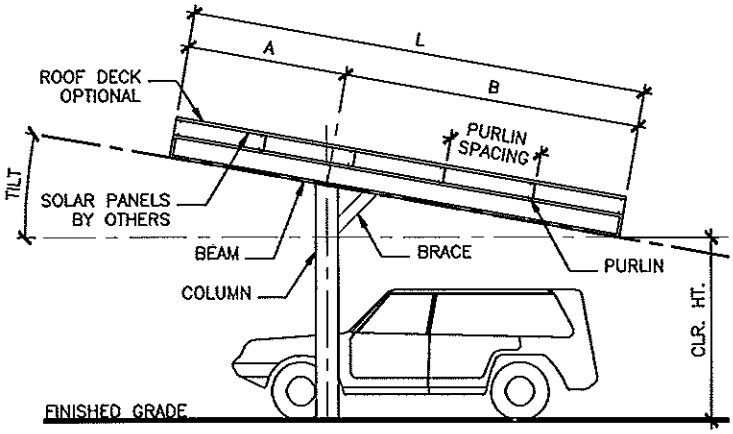

3 CROSS SECTION
BSP DOWN SLOPE N.T.S.

SPECIFICATIONS

L = (MAX. 24')
B = (2/3L MAX.)
A = (L−B)
PURLIN SPACING =
TILT = (IN DEGREES)
MIN. CLEAR HIGH =
HIGH EAVE = HIGH EAVE = CLR HT + 18" + LSW (TILT)
PANEL GAP (IF ANY) =
PORTRAIT: OR, LANDSCAPE: SOLAR PANEL
ROOF DECK (OPTIONAL) =
CANTILEVER (OPTIONAL) =
HANDICAP SPACE (OPTIONAL) =

NOTES

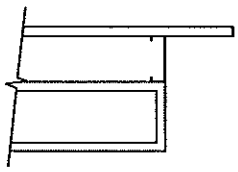

OPTIONAL SOLAR PANEL CANTILEVER
N.T.S.

BAJA CONSTRUCTION CO., INC.
223 FOSTER ST., MARTINEZ CA 94553
1-800-366-9600 FAX: (925) 229-0161

SOLAR SUPPORT SYSTEM
BRACED SINGLE POST

PROJ. NO.:

SHEET: 1 OF 4